R600 NORMAL PRESSURE PUMP

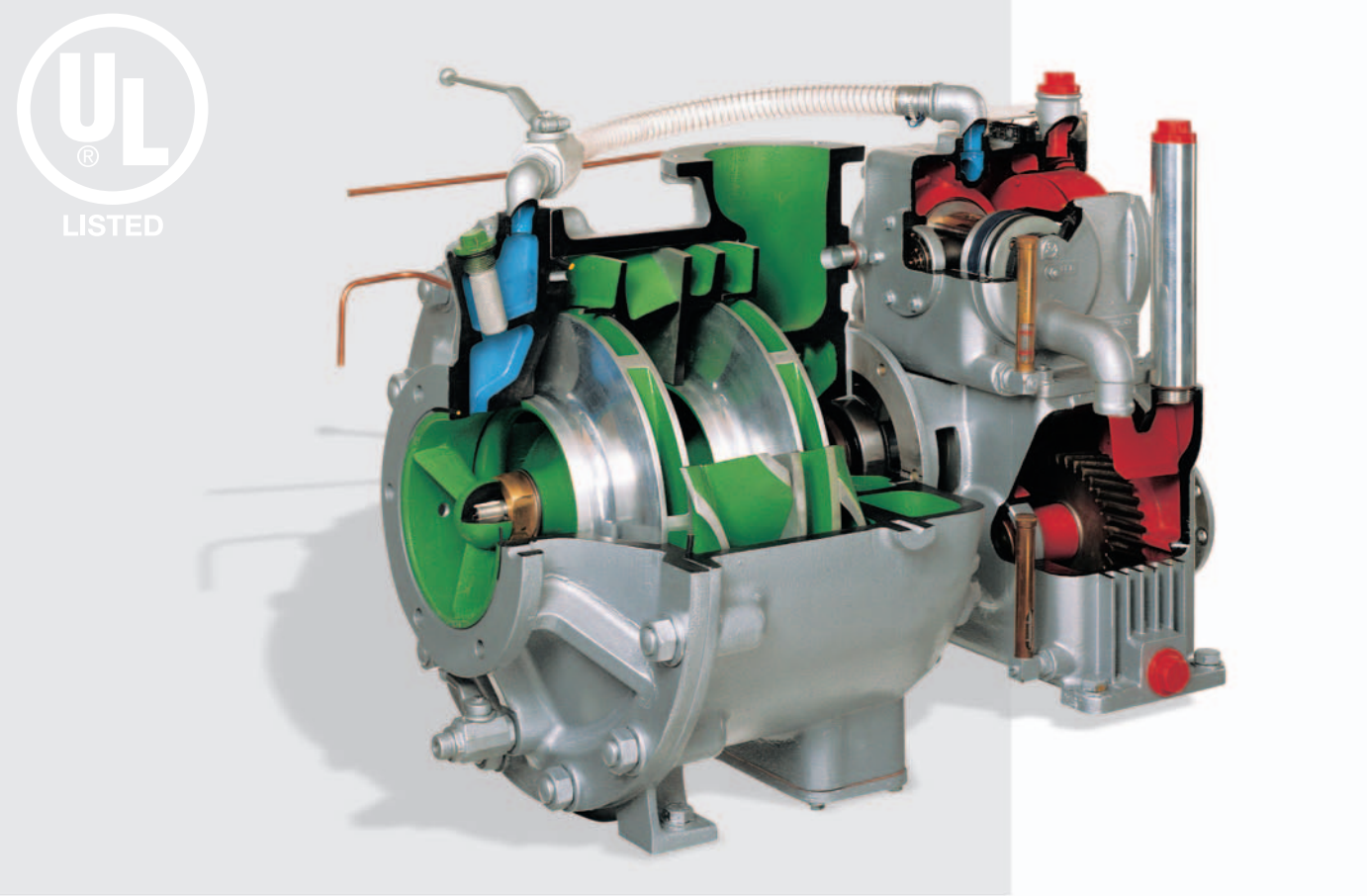

Advantages

- High pump performance with a flat pump curve.
- Low power requirement due to high efficiency level.
- Maintenance-free shaft sealing.
- Direct mounting (with or without gearing) on the SAE engine flange.
- Pump transmission for drive speeds of approx. 1,000 – 3,000 rpm.
- High operational security as the main bearings, pump gearing and piston suction pump run in an oil bath.
- Centrifugal, extinguishing pump for airport, industrial and large fire-fighting vehicles, as well as for fireboats and stationary systems.
- Automatic suction (optional).
- Automatic, FOAMATIC RVMA500 NP foam proportioning system with a maximum of 3 differing admixing rates (optional).
- Pump pressure governor (optional).

Technical data

The ROSENBAUER centrifugal extinguishing pump consists of:

- A two-stage NP (normal pressure) centrifugal pump
  Housing and impellers made of corrosion-resistant, anodised light alloy, gunmetal (optional), stainless steel shaft, pump shaft with axial face sealing, double roller bearing on the pressure side of the pump and single roller bearing on the suction side.
- Rated output: 7,000 l/min at 10 bar
- Tank suction: 6,000 l/min at 10 bar and 3 m
- Closing pressure: approx. 12 bar
- Rated speed: 2,300 rpm
- Power requirement: from 160 kW
- Drive: via PTO or SAE1-flange, rotational direction left / right
- Suction intake: 1 x NW150 / pressure outlet: 1 x NW100
- Double piston priming pump with oil bath lubrication
  Light alloy piston and housing, stainless steel liners
- Suction lift: 3 m in approx. 11 sec, max. suction height 7.5 m (NW150)

R600 normal pressure pump

GRIZZLY ULF 3000/2000 universal, industrial fire-fighting vehicle with a "MIXMATIC" pressurised foam proportioning system and a R600.

Air Crash Tender SIMBA 8x8-HRET with R600

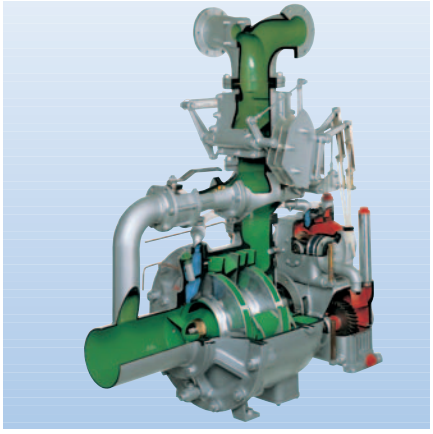

R600 with "FOAMATIC RVMA 500" foam proportioning system

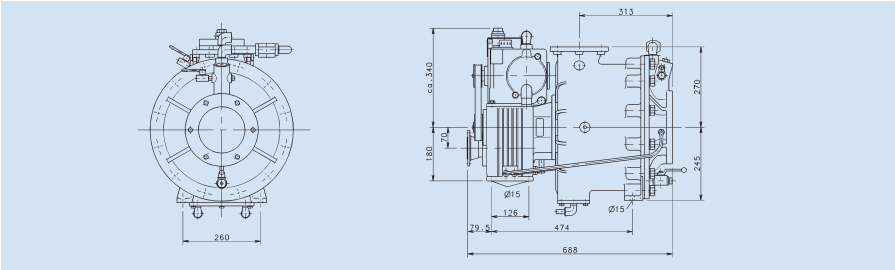

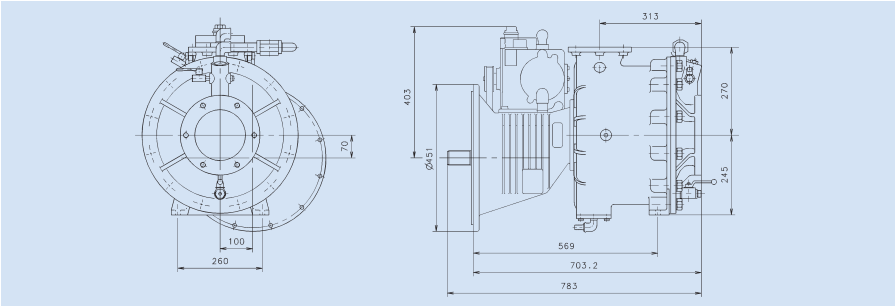

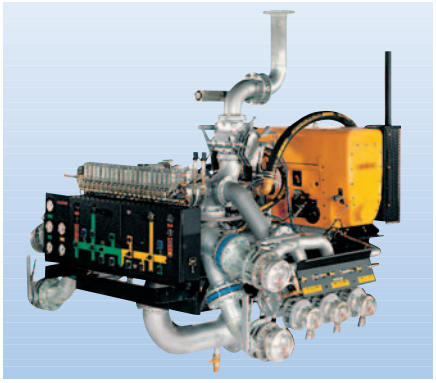

R600 installed in a "MIXMATIC" pressurised foam proportioning system

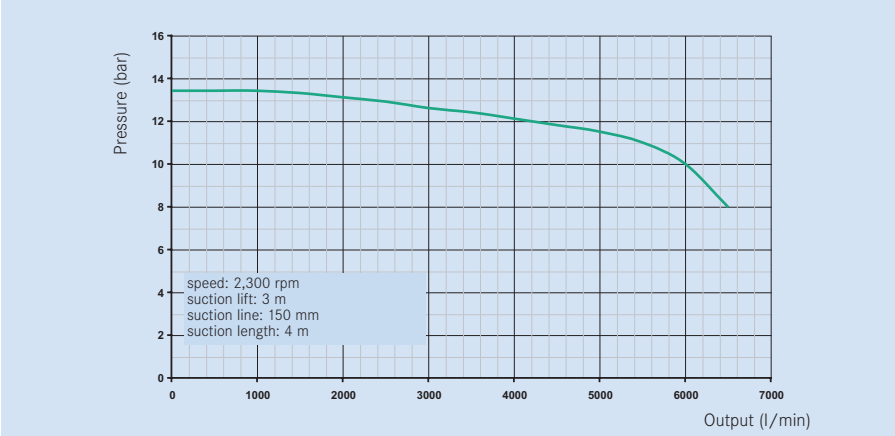

- bar ≙ total pump lift
- Factors influencing measurement: suction lift, suction line, number and type of suction line couplings, air pressure, height above sea level, water/air temperature, etc.

ROSENBAUER INTERNATIONAL Aktiengesellschaft
A-4060 Leonding, Paschinger Str. 90, AUSTRIA

Tel.: +43 (0)70 6794-0
Fax: +43 (0)70 6794-83
E-Mail: office@rosenbauer.com
http://www.rosenbauer.com

Text and illustrations are not binding. The illustrations may show optional extras only available at extra charge. ROSENBAUER retains the right to alter specifications and dimensions given herein without prior notice.

KR213_PR_E_2004-06