FIX MIX

Automatic normal- and high pressure around-the-pump foam proportioning system for N/NH-pumps

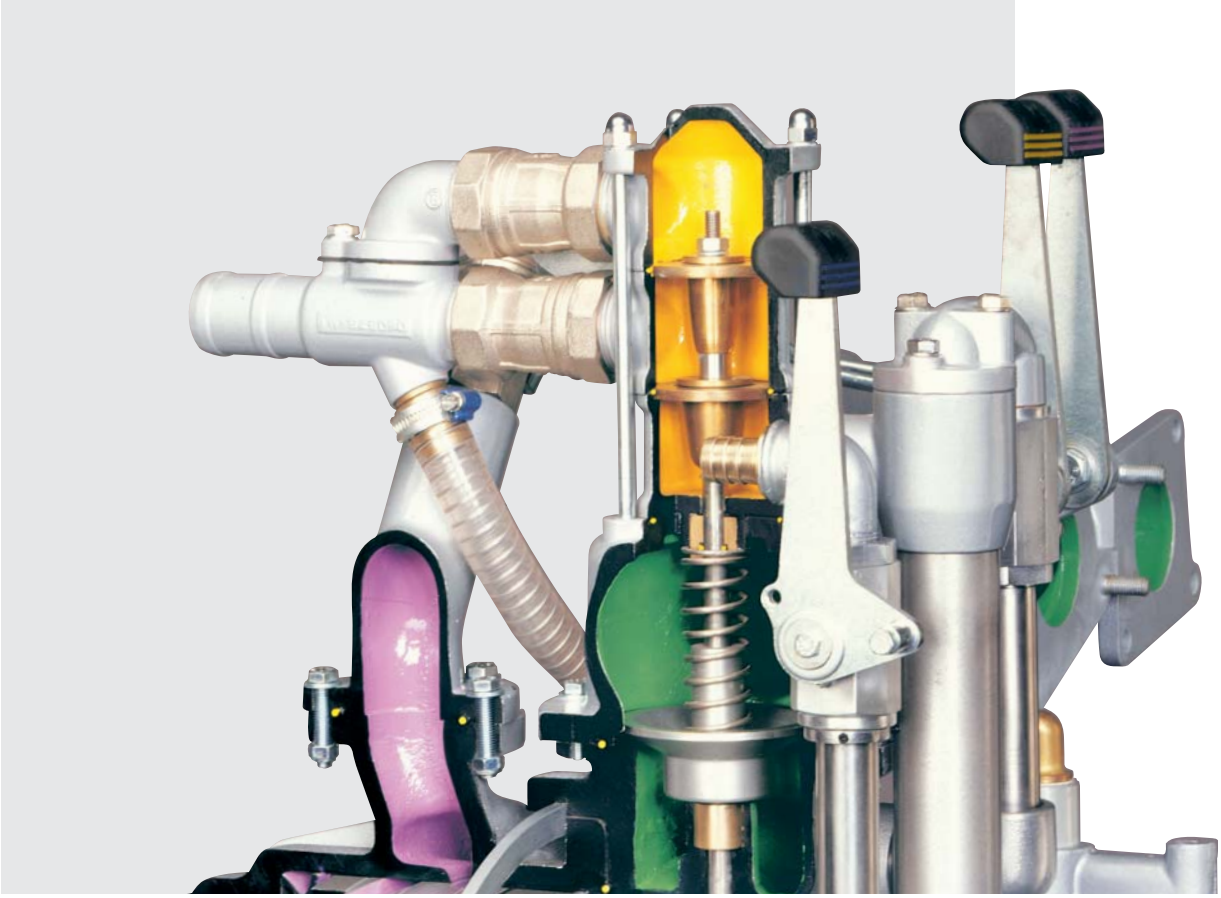

rosenbauer

Advantages:

- Robust, mechanical system
- Easy to use, single-lever control
- Simultaneous NP and/or HP foam extinguishing
- Up to 3 admixing rates for NP
- 1 admixing rate for HP
- Constant admixing - independent of pump output and pump pressure
- High external foam suction capacity
- Entirely maintenance-free

NP...normal pressure
HP...high-pressure

Technical data:

Design: around the pump foam proportioning system
Flow measurement: mechanical, water measuring cone
Metering: fully automatic, mechanically controlled, foaming agent dosing cone
Foaming agent suction lift:
2 m* (1.5” suction line)

Foaming agent output:
N/NH 20/30 max. 180 l/min*
N/NH 40 max. 280 l/min*
Admixing accuracy:
NP (relative):
180–400 l/min: -0% / +20%,
>400 l/min: -10% / +10%
HP (absolute):
90–400 l/min: -0.1% / +0.2%
Applications: for all standard types of foam agent

Optional features: gunmetal versions, pneumatic operation

* Viscosity: 20 cSt

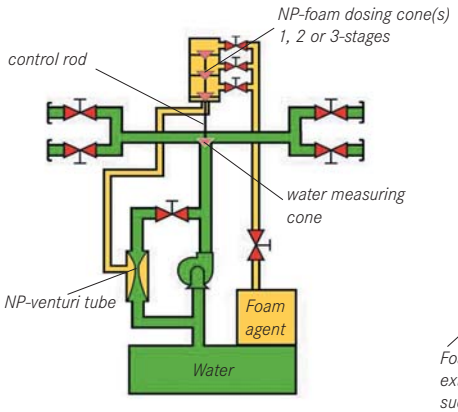

NP-FIX MIX
3-STAGES

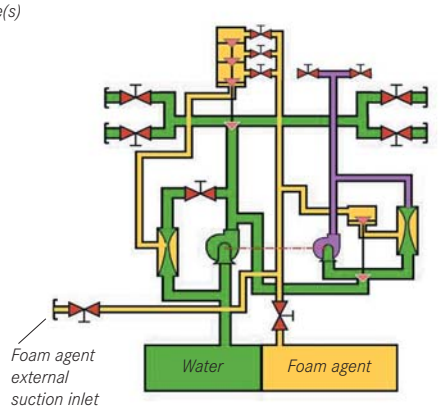

COMBINATION-FIX MIX
3-STAGE NP AND 1-STAGE HP

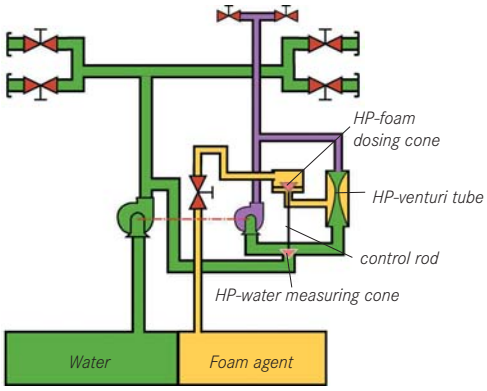

HD-FIX MIX
1-STUFIG

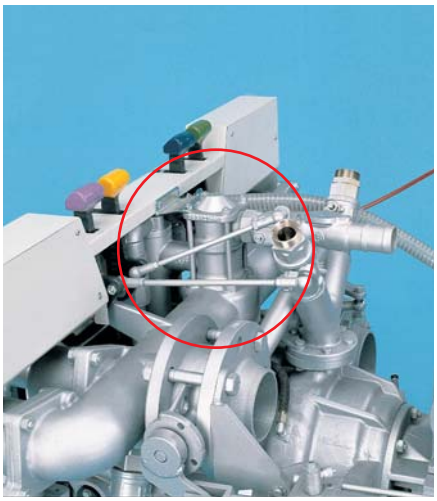

NP-FIX MIX

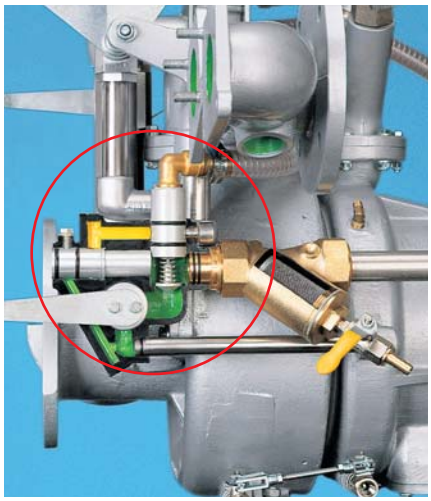

HP-FIX MIX

Field of operation:

SIMULTANEOUSLY

NP	HP
Water	OFF
OFF	Water
Water	Water
Foam	OFF
OFF	Foam
Foam	Foam
Water	Foam

ROSENBAUER INTERNATIONAL Aktiengesellschaft
A-4060 Leonding, Paschinger Str. 90, AUSTRIA

Tel.: +43 (0)70 6794-0
Fax: +43 (0)70 6794-83
E-Mail: office@rosenbauer.com
http://www.rosenbauer.com

Text and illustrations are not binding. The illustrations may show optional extras only available at extra charge. ROSENBAUER retains the right to alter specifications and dimensions given herein without prior notice.